2016 2CVPARTS.com CHAMPIONSHIP

SPORTING & TECHNICAL REGULATIONS

Organised by the British Automobile Racing Club

Thruxton Circuit, Andover, Hampshire, SP11 8PN

Published Copy

Version 5 – 20th February 2016

1 SPORTING REGULATIONS - GENERAL

1.1 TITLE & JURISDICTION:

The 2CVPARTS.com Championship is organised and administered by the British Automobile Racing Club (BARC) in association with the Classic 2CV Club and promoted by them, in accordance with the General Regulations of the Royal Automobile Club Motor Sports Association (incorporating the provisions of the International Sporting Code of the FIA) and these Championship Regulations.

MSA Championship Permit No.:	2016 / R043
Race Status:	Clubman
MSA Championship Grade:	Grade C

1.2 OFFICIALS:

1.2.1	Co-ordinator:	David Wheadon(BARC)
1.2.2	Licensed Eligibility Scrutineer:	Keith Auld (BARC)
1.2.3	Championship Stewards:	Bill Coombs (BARC) Dennis Carter (BARC) Dale Wells (BARC) Guy Woodward (BARC)

Any three of the Championship Stewards may sit to make a decision. In accordance with (G) 2.7, Championship Stewards may only adjudicate on any disputes, irregularities or appeals arising from the approved Championship regulations. Under (G) 2.7.1, Championship Stewards are also empowered to consider any request from the Championship co-ordinator to penalise any Competitor for any breach of Championship regulations after holding a formal hearing to impose a penalty in accordance with C.2.1.1 (subject to the rights of appeal provided for in Section C). Under (W) 2.2.1, the Championship Stewards can only adjudicate upon any disputes, irregularities or appeals arising from the approved Championship Regulations. They are also empowered to consider any request from the Championship Co-ordinator to penalise any Competitor for breach of Championship Regulations and after holding a formal hearing, to impose a penalty in accordance with C.2.1, subject to the rights of appeal to the MSC provided in Section C.

1.2.4	Championship Clerk of the Course:	N / A
1.2.5	Championship Drivers Representative:	Katy Storey (Classic 2CV Racing Club)

1.3 COMPETITOR ELIGIBILITY:

1.3.1 Entrants must:

(a) be current members of the BARC and

(b) be Registered for the Championship and

(c) be in possession of a valid MSA Entrants Licences.

1.3.2 Drivers and Entrant/Drivers must:

(a) be current members of the BARC and

(b) be fully paid up “racing membership” card holding members of the Classic 2CV Racing Club.

(c) be Registered for the Championship and

(d) be in possession of valid Competition (Racing) National B status Licence, as a minimum or

(e) A professional driver, in possession of a valid Licence (featuring an E.U. flag) and medical, issued by the ASN of a member country of the European Union, or comparable country. ((H)26.2.1, applies)

(f) If participation in the Championship requires absence from education a driver, in full time school education is required to have the approval of their head teacher and a letter stating such approval from their school in order to fulfil registration for the Championship. A driver shall not take time out of their education to participate in motor sport without the prior written approval of their education establishment.

1.3.3 At the discretion of the organisers, guest drivers may compete in a race forming a round of this Championship under whatever conditions they deem to be appropriate, but may NOT score points towards the Championship.

1.3.4 All necessary documentation must be presented for checking at all rounds when signing-on. This will include the Competition Licence, BARC membership card and Classic 2CV Racing Club membership card.

1.4 REGISTRATION:

1.4.1 All competitors must register for the Championship by returning the Registration Form with the Registration Fee to the Co-ordinator prior to the closing date for entries for the first round being entered.

1.4.2 There is no Registration Fee payable.

1.4.3 Registration numbers issued will be the permanent Competition numbers for the Championship season.

1.4.4 Numbers 1-20 will be reserved by the Classic 2CV Racing Club for the driver finishing in that Championship position from the previous year. There is no obligation for the driver to take the number. No other driver may take the number.
Numbers 21-99 will be allocated by the Classic 2CV Racing Club to any driver regardless of Championship finishing positions from the previous year.

1.5 CHAMPIONSHIP EVENTS:

1.5.1 The Championship is scheduled to be contested over five Meetings as follows:

Date:	Circuit:	Organising Club (Centre):	Format:
Mar 19	Oulton Park	BARC (N-W)	2 sprint races
Apr 23/24	Croft	BARC	3 sprint races
May 14/15	Cadwell Park	BARC	2 sprint races
Jun 25/26	Brands Hatch	BARC	2 sprint races
Aug 19-21	Anglesey	BARC	24 Hour race

1.5.2 In accordance with MSA Regulation D11.1, the organisers reserve the right to amend the published list of dates and rounds, in which case, all registered competitors will be informed of the amendments by Official Bulletins posted to the address specified on the Official Registration Form.

1.5.3 The Championship will contain two classes:

a) Club Class

b) Eco Class

1.6 SCORING:

1.6.1 Drivers competing in two cars in a meeting where driver changes are permitted must nominate their points scoring car prior to qualifying. If no car is nominated, the first car driven will be counted.

1.6.2 Points will be awarded to Competitors listed as classified finishers in the Final Results as follows:-

1st – 100, 2nd – 90, 3rd – 80, 4th – 75, 5th – 70, 6th – 65, 7th – 60, 8th – 55, 9th – 50, 10th – 45, 11th – 40, 12th – 35, 13th – 30, 14th – 25, 15th – 20, 16th – 15 and 10 points for all other finishers

In addition five points will be awarded to the driver setting the pole position time and three further points awarded to the driver setting the fastest race lap.

1.6.3 **Car Sharing**

1.6.3.1 Drivers who share a car at a meeting where driver changes are not permitted shall score the total of their own points and the points of the driver with whom they share the car, but only when the sharing driver is competing in the shared car.

1.6.3.2 Drivers competing in two cars in a meeting where driver changes are not permitted will score points based on their finishing positions in the races they compete in. Rule 1.6.3.1 will not apply to the driver competing in two cars at the same meeting.

1.6.4 The totals from all qualifying Events run will determine final Championship points and positions.

1.6.5 Ties shall be resolved using the formula in (W) 1.3.4, in the current MSA Yearbook.

1.6.6 Where the race distance has been reduced in accordance with article 2.6 below, it shall still count as a full points scoring round.

1.6.7 Competitors not registered for the Championship may be permitted on an individual round basis and:

(a) will be deemed "Guest Competitors"

(b) will not score points and for the purpose of points scoring will be ignored

(c) will be allowed to take their place on the podium and qualify for any Event awards

(d) must comply with the eligibility criteria as prescribed in article 1.1 above, with the exception of 1.3.1 (a & b) and 1.3.2 (a, b & c) as appropriate.

1.6.8 In addition to scoring point as classified finishers as above, any driver listed as a classified finisher in an Eco Class car will score Eco Class points as follows, based on their Eco Class finishing position:-

1st – 100, 2nd – 90, 3rd – 80, 4th – 75, 5th – 70, 6th – 65, 7th – 60, 8th – 55, 9th – 50, 10th – 45, 11th – 40, 12th – 35, 13th – 30, 14th – 25, 15th – 20, 16th – 15 and 10 points for all other Eco Class finishers

In addition 5 Eco Class points will be awarded to the driver setting the fastest time in qualifying (Eco Class pole position) and three further Eco Class points awarded to the driver setting the fastest race lap (Eco Class fastest lap).

Eco Class points do not count towards the Championship points and positions.

1.7 AWARDS:

1.7.1 All awards are to be provided by the Classic 2CV Racing Club.

1.7.2 Per Event: A garland will be presented to the winner of each race.

1.7.3 Championship: A trophy will be awarded to the overall Championship winner.

1.7.4 Presentations:
Awards will be presented at the end of each Event and/or at the end of the Championship at the designated presentation ceremony. Attendance at any such ceremony is mandatory and failure to attend may result in the loss of all awards.

1.7.5 Entertainment Tax Liability:
Prize money and Bonuses shall be posted to the Entrants within thirty days of the results being declared final after each Event. In accordance with current government legislation, the BARC is legally obliged to withhold tax at the basic rate on all payments to non-UK resident sportsmen/women and account to HMRC using form FEU1, the quarterly return of

payments made to non-resident entertainers and sportsmen/women. That is, those persons who do not have a normal permanent residence in the UK and the UK does not include the Isle of Man, Channel Islands or Eire. This means that, as the organiser, the BARC is required to deduct tax at the current rate applicable from any such payments they may make to non-UK residents. Under certain circumstances, it may be possible for competitors to enter into an agreement with the Inland Revenue to limit the tax withheld. Any application for such an arrangement must be made in writing and not later than 30 days before the payment is due.

For further information contact:

HMRC Personal Tax International, Foreign Entertainers Unit, St John's House, Merton Road, Liverpool L75 1BB, Tel: 01514 726488, Fax: 01514 726483.

1.7.6 Title to all Trophies:
If Provisional Results or Championship Tables are revised after any presentations and these revisions affect the distribution of awards the Competitors concerned must return them to the organisers in good condition within 7 days.

2 CHAMPIONSHIP EVENT MEETINGS & RACE PROCEDURES

2.1 ENTRIES:

2.1.1 Competitors are responsible for sending in correct and complete entries with the correct entry fee prior to the closing date for entries before each Event. Entries will be collated by the Classic 2CV Racing Club and passed en-bloc to the BARC who will accept entries in accordance with these regulations. The closing dates will be 20 days before each Event.

2.1.2 Incorrect or incomplete entries (Including driver to be nominated entries) are to be held in abeyance until they are complete and correct and the date of receipt for acceptance of entry purposes shall be the date on which the Meeting Organiser receives the missing or corrected information or fee.

2.1.3 Any withdrawal of Entry or Driver/Car changes made after acceptance of any entry must be notified to the Meeting Organisers in writing. MSA regulations D25.1.12 and D25.1.13 will be applied.

2.1.4 The Entry Fee for each event shall be specified in the SRs and on the entry form.

2.1.5 Reserves will be listed in the Final List of Entries published with Final Instructions or in a Bulletin.

2.2 BRIEFINGS:

Organisers should notify Competitors of the times and locations for all briefings in the Final Instructions for the meetings. Competitors must attend all briefings.

2.3 QUALIFICATION PRACTICE:

2.3.1 Should any Practice session be disrupted the Clerk of the Course shall not be obliged to resume or re-run the session, the decision of the Clerk of the Course shall be final.

2.3.2 For each event, except the 24 Hour event, there shall be two x 15 minute qualifying sessions, split by at least an hour. For a shared car, each driver must complete one session. For the two hour race there shall be a 40 minute qualifying session. For the 24 Hour event see regulation 6.1.5

2.3.3 Each driver shall complete a minimum of 3 laps in the car to be raced and in the correct session, in order to qualify (MSA Regulations Q4.5).

2.3.4 Each qualifying session provides the qualifying time, and therefore the grid position for, each race.

2.4 RACES:

2.4.1 Should any race be disrupted the Clerk of the Course shall not be obliged to resume or re-run the race ((Q) 5.4) in addition article 1.6.6 above applies.

2.4.2 All races will run an ‘open’ pit lane, with a green light shown at the pit exit, unless under Safety Car conditions.

2.4.3 Meeting Organisers may impose Stop / Go Penalties for infringement of pit lane or driver change regulations during endurance Events where driver changes are allowed.

2.5 STARTS:

2.5.1 All cars will be released to form up on the grid prior to the start in formation as specified on the grid sheet.

2.5.2 All race start countdowns are to have a minimum elapsed period of 5 minutes from the time all cars are released to form up on the grid to the start of the Green flag Lap(s) in the formation as specified on the Track Licence for each circuit.

2.5.3 The start will be via a Standing start. The countdown procedure and audible warning sequence prior to the start of the race shall be:

	Signal:	Instruction:
I.	1 minute	Start engines and clear the grid.
II.	30 Seconds	Be prepared for start of Green Flag Lap
III.	Green Flag	Complete one lap of the circuit and reform into grid positions
IV.	5 Seconds	The grid is complete

V. The red lights will be switched on five seconds after the 5 second board is withdrawn and will be extinguished between 2 and 7 seconds later to indicate the start of the race.

2.5.4 Any car removed from the grid after the 1 minute stage or driven into the pits on the Green Flag lap shall be held in the pit lane and may start the race after the last car to take the start from the grid has passed the start-line or pit lane exit, whichever is later.

2.5.5 Any driver unable to start the Green Flag/Pace lap or start is required to indicate their situation as per MSA Regulation Q12.13.2. In addition any driver unable to maintain their grid position on the Green Flag Lap, to the extent that all other cars are ahead of them, may complete the Green Flag lap but must remain at the rear of the last row of the grid but ahead of any cars to be started with a time delay.

2.5.6 In the event of any starting lights failure the Starter will revert to use of the National Flag once all competitors have been advised of the fact

2.5.7 The Organisers reserve the right to amend this start procedure via a bulletin issued to all competitors. This may involve changing the method of starting and/or the countdown procedure leading up to the start signal being given.

2.5.8 Excessive weaving to warm-up tyres - using more than 50% of the track width, and falling back in order to accelerate and practice starts, is prohibited.

2.6 SESSION RED FLAG

2.6.1 Should the need arise to stop any practice or qualifying session, RED LIGHTS will be switched on at the start line and RED FLAGS will be displayed at the start line and at all Marshals Signalling Points around the Circuit. This is the signal for all drivers to cease circulating at racing speeds, to slow to a safe and reasonable pace and to return to the pit lane.

2.6.2 Should the need arise to stop any race, RED LIGHTS will be switched on at the start line and RED FLAGS will be displayed at the start line and at all Marshals Signalling Points around the Circuit. This is the signal for all drivers to cease circulating at racing speeds, to slow to a safe and reasonable pace and to return to the starting grid which will automatically become a Parc Fermé area.

2.6.3 Cars may not enter the Pits unless directed to do so or repairs are necessary. Work on cars already in the Pits must cease when a race is stopped and may only continue under the control of a Scrutineer. Cars in the Pits may not re-join the grid.

2.6.4 All Competitors who are able to take part in any restarted race may do so in accordance with MSA Regulations Q5.4 and Q5.5.

2.7 PITS, PADDOCK & PITLANE SAFETY:

2.7.1 Pits & Paddock: Competitors must ensure that the MSA, Circuit Management and Organising Club Safety Regulations are complied with at all times. In

		addition any paddock plan issued by the Organisers must be complied with and the minimum amount of space should be used when setting up.
2.7.2	Pit lane:	The outer lane or lanes are to be kept unobstructed to allow safe passage of cars at all times. The onus shall be on all Drivers to take all due care and respect the pit lane speed limits. No-one under the age of 16 is permitted access to the pit lane unless they are the holder of an MSA Junior Race licence
2.7.3	Refuelling:	May only be carried out in accordance with the MSA General Regulations, the Organising Club Regulations, Circuit Management Regulations and the SRs or Final Instructions issued for each Circuit/Meeting.
2.7.4	Speed Limit	Pit Lane Speed Limit will be 60 k.p.h.

2.8 RACE FINISHES:

After taking the Chequered Flag drivers are required to:

- progressively and safely slow down
- remain behind any competitors ahead of them,
- return to the Pit Lane Entrance/Paddock Entrance as instructed,
- comply with any directions given by Marshals or Officials
- keep their helmets on and harnesses done up while on the circuit or in the pit lane
- place their car into the Parc Fermé where it must remain until released by the Championship Eligibility Scrutineer or his deputy
- Attend any podium presentation that may be required

2.9 RESULTS:

All Practice Timesheets, Grids, Race Results are to be deemed Provisional until all vehicles are released by Scrutineers after Post Practice/Race Scrutineering and/or after completion of any Judicial or Technical Procedures. (MSA regulation D26.3)

2.10 TIMING MODULES:

It is the Competitors responsibility to ensure that a working transponder is fitted to the vehicle in accordance with (Q) 12.2.1. No electronic equipment may be placed within five metres of any official timing line and any breach of this may result in the confiscation of the equipment concerned.

2.11 QUALIFICATION RACES:

If any event is oversubscribed the Organising Club may at their discretion run Qualification Races details of which will be published in Final Instructions for the event.

2.12 OPERATION OF SAFETY CAR:

The Safety Car will be brought into operation and run in accordance with Section Q, Appendix 2 of the MSA General Regulations.

2.13 ONBOARD CAMERAS:

Cameras may be fitted to vehicles provided that the camera fitment is approved by the Scrutineer and that any footage obtained is not for commercial use. The Clerk of the Course and the Stewards may make use of any such footage in reaching their decisions on any judicial matters.

3 SPECIFIC CHAMPIONSHIP REGULATIONS:

3.1 General Regulations

3.1.1 For each meeting where the duration of each race is less than 60 minutes, there may be a maximum of two drivers per car who may enter and share a car.

3.1.2 At all meetings there will be two qualifying sessions scheduled each of 15 minutes duration which will be split by at least an hour. For a shared car each driver must complete one session. The times set in first qualifying session will set the grid for the first race and the times set in the second session will set the grid for the second race.

3.1.3 The standard minimum scheduled distance shall be 20 minutes whenever practicable but should any race distance be reduced at the discretion of the Clerk of the Course or Stewards of the Meeting, it shall still count as a full points scoring round.

3.1.4 When sharing a car each driver must complete one race, there may be no driver change-over made.

3.1.5 A driver may only race the car in which he/she set a Qualifying time no replacement cars are permitted.

3.1.6 The 2 hour enduro and the 24 Hour race will be started by means of a rolling start using the following procedure and audible warning sequence:

	Signal:	Instruction:
I.	1 minute	Start engines and clear the grid.
II.	30 Seconds	Be prepared for start of Green Flag Lap
III.	Green Flag	Complete one lap of the circuit forming into grid order prior to corner of the circuit
iv.	Red Lights ON	Maintain grid position
v.	Red Lights OFF	Race start signal

3.1.7 The use of tyre heating/heat retention devices, tyre treatments and compounds is prohibited.

3.2 Enduro Event: Additional/Special Regulations

3.2.1 **General Principles:**

3.2.1.1 This section (3.2) of the 2CV Parts.com Championship Regulations is not applicable to the 24hour Event.

3.2.1.2 Pit lane open and pit lane closed boards will be shown at the start line at the relevant times.

3.2.1.3 For races of one hour duration, driver changes will take place between 1/3 and 2/3 duration of the event in question.

3.2.1.4 For races of two hours duration, there will be three mandatory pit stops for driver changes. Refuelling is not permitted save for exceptional circumstances, and then only at the discretion and direction of the Clerk of the Course.

3.2.2 **Single Drivers:**

3.2.2.1 Single Drivers must advise the meeting Organisers at the time of entry, and confirm at sign-on.

3.2.2.2 All cars with a single driver must enter the pit lane during the driver change-over period as indicated in 3.2.1.3 & 3.2.1.4 above

3.2.2.3 Observing all usual pit lane safety regulations, the car must stop before seatbelts are removed. Failure to comply may lead to the imposition of a Stop / Go Penalty by the Clerk of the Course.

3.2.2.4 During driver changes, the engine may be left running except during events where re-fuelling takes place in which case the cars' ignition must be 'dead'.

3.2.2.5 The driver must exit the car via the drivers' door, close the door and may then re-enter the car via the drivers' door fully replacing seat belts before moving off.

3.2.2.6 Drivers may then exit the pit lane re-joining the race.

3.2.3 **Multiple Driver Teams**

3.2.3.1 Multiple driver teams must advise the Meeting Organisers at the time of entry and confirm driver names and order of practice at sign on.

3.2.3.2 Teams must advise the Meeting Organisers of the order that drivers will be racing in at least 1 hour before racing starts

3.2.3.3 All cars must enter the pit lane during the driver changeover period as indicated in 3.4.1 c & d above.

3.2.3.4 Observing all usual pit lane safety regulations, the car must stop before seatbelts are removed. Failure to comply may lead to the imposition of a Stop / Go Penalty by the Clerk of the Course.

3.2.3.5 The driver must exit the car via the drivers' door. The engine may be left running except during events where re-fuelling takes place in which case the cars' ignition must be 'dead'.

3.2.3.6 The next driver must enter the car via the drivers' door fully replacing seat belts before moving off.

3.2.3.7 Drivers may then exit the pit lane re-joining the race.

3.2.3.8 A maximum of four drivers will be allowed per team.

4 PENALTIES:

All penalties will be in accordance with Section C of the current MSA Yearbook and these Regulations.

4.1 Infringements of Technical Regulations:

4.1.1 Arising from post practice Scrutineering or Judicial Action: Minimum Penalty:
The provisions of MSA Regulations: C3.3.

4.1.2 Arising from post-race Scrutineering or Judicial Action:
Minimum Penalty: The provisions of MSA Regulations: C3.5.1 (a) and (b).

For infringements deemed to be of a more serious nature the Clerk of the Course may invoke the provisions of Regulation C3.5.1 (c). However if the Clerk of the Course believes that there is some mitigation surrounding the infringement then C3.5.1 (c) need not be implemented.

4.2 Infringements of Non-Technical Regulations

All infringements of non-technical MSA Regulations and the Sporting Regulations will be dealt with in accordance with these Championship Regulations and the General Regulations of the MSA

4.3 Additional specific championship penalties:

4.3.1 Any Competitor adjudged to have made a false start or breached any part of the start procedure will be penalised by means of a ten second penalty being added to his total race time.

4.3.2 Breaches of 2.7.4 will usually be dealt with by means of a fine of up to £10 per k.p.h. above the limit in qualifying and by means of a “drive through” penalty during races.

4.3.3 Any Competitor excluded from the results of an Event will not be allowed to count the score as part of any dropped scores.

4.3.4 Any Competitor may be called before the Championship Stewards who at their discretion may take further action against the Competitor. This may include, but is not limited to, the loss of Championship points, a fine to a maximum of £1,000 or exclusion from part or all of the Championship.

4.3.5 The Clerk of the Course may impose a “Stop / Go” or “Drive through” penalty for a breach of regulations, in accordance with Q 12.6.

4.3.6 Any vehicle not carrying the mandatory Championship decals will be subject to a fine of £100 for the first infringement and then £500 for any subsequent infringement.

5 TECHNICAL REGULATIONS

5.1 Introduction:

The following Technical Regulations are set out in accordance with the MSA specified format and it should be clearly understood that if the following texts do not clearly specify that you can do it you should work on the principle that you cannot. For the purposes of these regulations, modification means any change in the design, material, shape, dimension and / or surface finish of any component except for basic manufacturing processes, normal wear and published service or repair procedures. 'Standard' is as defined in Citroen manuals MAN108161 and MAN308162.

5.2 General Description:

The 2CVPARTS.com CHAMPIONSHIP is for Competitors participating in standard production post 1970 Citroen 2CV6 saloon vehicles. The Championship was conceived as a low cost form of motorsport. It is intended to be a racing formula to develop the continued use and enjoyment of the 2CV and where driving skills and car control are of paramount importance and where technical development takes a secondary place.

The Championship will contain two classes:

- Club Class.
- Eco Class.

Unless stated in the following sections the requirements are the same for both classes.

5.3 Safety Requirements:

5.3.1 The following Articles of MSA Appendix K Safety Criteria Regulations will apply: **K1, K1.2.1, K1.3.1 - 4, K5, K6, K8, K9, K10, K13 & K14.**

5.3.2 A plumbed in fire extinguisher that complies with MSA Regulations is mandatory (**Q19.14.7**.).

5.3.3 Wooden rimmed steering wheels are not permitted.

5.3.4 A steel roll cage complying with the MSA Yearbook shall be installed. A rigid roof of sheet metal (minimum 1.5mm steel or 3mm aluminium) shall be fitted to the roll cage. The roof must cover the whole perimeter defined by the four main tubes at roof level. It may be fitted either by being carefully welded to the main tubes, or by being bolted to substantial brackets welded to the main roll cage tubes. The roll cage shall be fitted with door bars to both sides of the car at hip level. Cross bars shall be fitted across the car between the front feet and the rear feet of the cage. These must be made of one of the following:

a) the same material / cross section as the roll cage

b) or solid rectangular bar of at least 5mm x 50mm

c) or rectangular box section of at least 50mm x 25mm x 3mm wall thickness.

The bars are to be attached to the roll cage feet by good quality welds. Front and rear cross bars must be securely bolted through the floor to the chassis. Where rear cross bars are fitted across the seat riser, these must be securely welded at multiple points along its length, as these cannot be bolted to the chassis. The padding of any dangerous points of the roll-bars is recommended in order to prevent injury.

5.3.5 Rear harness mountings are to be mounted either on the rear cross member of the roll cage or on the body floor through the saddle above the fuel tank, (in accordance with **Section K** – drawing number FIA 253-42 – MSA Yearbook) not using the standard points in the inner wing.

5.3.6 FiA homologated seat belts are mandatory (**Q19.14.2**). **Particular attention should be given to seat belt angles and anchorage. See FIA 253-42.**

5.3.7 It is permissible to add a bracket or tube from the chassis side rail to the front/rear cage feet. This bracket is in addition to the cross bar described in 5.3.4. One of the following 3 materials specifications must be used:

- Square section steel tube of at least 40mm x 40mm x 3mm.
- Round CDS tube at least 38mm dia x 3mm wall.
- A sheet metal bracket fabricated from at least 4mm thick mild steel plate.

Plates to attach to cage feet must be of the same specification as the cage foot itself.

In the case where a tube is used, a 3mm thick steel reinforcing plate must be welded to the end of the tube where it attaches to the chassis. This plate must be a minimum of 100mm wide and the same height as the chassis rail where it attaches.

The bracket assembly can be attached to the chassis side rail either by good quality welding or the use of 4 no. M8 bolts.

5.3.8 It is mandatory to use a harness with a minimum of 5 fixing points, where at least one fixing point is designed to prevent the driver from sliding forward and under the lap straps. Harnesses must be suitable for use with a Frontal Head Restraint (FHR) device and be properly installed in the car in accordance with the manufacturer's installation instructions. Installation guidance can also be found in the FiA publication 'Guide for the use of HANS® in international motor sport'.

5.4 General Technical Requirements and Exceptions:

5.4.1 The car shall be of sound construction, in good mechanical condition and well maintained in accordance with MSA General Technical Regulations (**Sections J & Q**) as appropriate. It shall be presented in good order. All inspection areas e.g. engine gearbox, suspension components, etc. shall be in a clean condition. Particular attention should be paid to the integrity of the internal chassis members.

5.4.2 Cars shall have a minimum weight of **655kg**, inclusive of driver at all times during and at completion of practice and racing.

5.4.3 All cars will have a championship log book. These will be filled in and updated throughout the year. Defects need to be rectified on a timescale to be agreed with the Scrutineer.

5.5 Chassis:

A standard Citroen UK Market 2CV6 or Dyane chassis (Citroen part No 75519116) or Classic 2CV Racing aftermarket racing Frome, or aftermarket racing SLC Chassis shall be used.

5.5.1 No part of the interior which is an integral part of the chassis/floor pan shall be removed or modified.

5.5.2 Strengthening of the chassis arms and good quality patch repairs is permissible. The removable cross member above the petrol tank shall be fitted unmodified.

5.5.3 A 'Substantial' guard must be fitted to protect the fuel tank.

5.5.4 Any 'Under-tray' or 'Fuel Tank Guard' fitted to the car may only be within the areas of the chassis and may not protrude beyond the chassis legs.

5.6 Bodywork:

5.6.1 **General**

5.6.1.1 It shall be the intention, at all times, to preserve a standard external appearance to the cars.

5.6.1.2 The body shell shall be all standard steel 2CV6 mounted on the chassis in its original position and by the manufacturer's original method. Both right and left hand drive models are permissible. With the exception of the "A" panels and rear wings all panels shall be mounted in their original position by the manufacturer's original method.

5.6.1.3 All doors shall be fitted with original anti-burst locks, which shall be kept unlocked during any practice or competition. Each rear door locking lever shall be held in the unlocked position by means of a spring.

5.6.2 **Interior**

5.6.2.1 No part of the interior which is an integral part of the bodywork may be removed or modified.

5.6.2.2 The front bulkhead shall be modified to comply with the requirements of the MSA Yearbook. The main necessity is to seal the openings bringing hot air into the passenger compartment via the heating system. These openings may be sealed by removing the metal ducting in position and securely fixing metal or GRP plates over the openings. Other small gaps (e.g. around handbrake lever) shall also be sealed.

5.6.2.3 All interior trim, fittings, courtesy light and passenger seats may be removed.

5.6.2.4 The fitting of additional instrumentation and associated switches and wiring is permitted.

5.6.2.5 The handbrake mechanism may be relocated to the floor near the driver's seat.

5.6.3 **Exterior**

5.6.3.1 No panel may be cut, drilled or in any other way modified to save weight other than those detailed in these regulations.

5.6.3.2 3 rear view mirrors shall be fitted as a minimum (1 interior and 2 exterior). The exterior mirrors shall be standard unmodified 2CV door mirror assemblies fitted in the manufacturers intended position. The interior mirror can be mounted in any position that gives the driver a rear view equal to or better than the standard interior mirror mounted in the manufacturers intended position.

5.6.3.3 All mirrors shall provide a view to the rear of the car and shall not be adjusted to provide an aerodynamic advantage.

5.6.3.4 It is permissible to alter the "A" panels by cutting away or perforating the recessed dished area to provide greater cooling for the engine bay (The "A" panels are those panels which fit between the rear top edge of the front wing and the bonnet).

5.6.3.5 The front inner wings may have material removed (see illustration B)

5.6.3.6 Alternative methods of fastening shall be permitted for the "A" panels and rear wings to aid quick removal. They shall be fixed in the manufacturer's intended position.

5.6.3.7 Mud flaps may be removed.

5.6.3.8 Bumpers must be removed. Over-riders must not be fitted.

5.6.3.9 The roof must be made of metal and must be firmly affixed to the body shell.

5.6.3.10 The bonnet must be secured by leather straps, rubber hooks or spring clips. It is recommended that the original catch at the bottom of the bonnet be removed.

5.6.3.11 The windscreen shall be of HPR laminated glass. It is permissible to fit an 'Aftermarket' heated element laminated windscreen.

5.6.3.12 The side and rear windows may be of toughened glass, clear acrylic (Perspex) or polycarbonate sheet of at least 4mm thickness, with the exception of the driver's door window which may not be made of glass.

5.6.3.13 Effective means of ventilation, as per MSA **J5.2.9**, by means of an openable vent flap, or driver's window to have a ventilation hole (100cm^2) or be openable as original design.

5.6.3.14 It is permissible to perforate the bonnet below the air inlet opening (where the number plate is normally mounted) with up to 4 no. holes each having a maximum diameter of 75mm.

5.6.3.15 A Classic 2CV Racing Club spoiler must be fitted so that the top of the spoiler touches the bottom front leading edge of the front wings and bonnet. The spoiler should remain as one part.

5.6.3.16 The use of fibreglass wings and bonnets is allowed. Particular attention should be given to the provisions of **5.6.1.1**.

5.6.4 **Silhouette**

5.6.4.1 The original silhouette must be maintained except in the areas covered by **5.6.3** and **5.6.4.2** of these regulations.

5.6.4.2 The standard roof must be removed and be replaced with a metal roof which must be securely fixed to the body shell and follow the original roofline. The front leading edge may be extended to fit behind the top part of the windscreen sealing rubber.

5.6.5 **Ground Clearance**

5.6.5.1 Ground clearance must comply with the requirements of the MSA Yearbook. For the purposes of this regulation the shock absorbers and exhaust are considered to be part of the car and are subject to the same ground clearance (40 mm minimum).

5.7 Engine: Club Class.

5.7.1 **General engine regulations**

5.7.1.1 The engine shall be a standard 2 cylinder horizontally opposed air cooled Citroen unit not exceeding 602cc with an external oil filter, fitted as a standard production item to any Citroen "A" series car. The following technical parameters will be used to define the word standard in the case of protest, and will be observed during pre and post-race scrutineering.

- Bore - 74.00mm (maximum)
- Stroke - 70.00mm (maximum)
- Top of barrel to top of barrel 395.50mm (with NO undersize tolerance)
- Valve head diameter
- Inlet not greater than 40.00mm
- Exhaust not greater than 34.00mm
- Valve stem diameter - Inlet 8.00mm - Exhaust 8.50mm - The valve stem is defined for the purposes of these regulations as the part of the valve that is in top 20mm of the valve guide when the valve is closed.
- The minimum overall valve length measurement, undersize tolerance of 0.15mm is permitted Inlet 88.00mm – Exhaust 86.45mm
- Piston Rings - Two compression, one oil control. The compression rings shall be of one piece construction. Total seal piston rings are not permissible.

5.7.1.2 **Camshaft**

A Classic 2CV Racing camshaft, supplied through the approved supplier, must be used. This may be either a reground standard camshaft or a new camshaft ground from a blank.

Camshaft specification is as follows:

Lobes I1, E1		
Lobe Separation	111.2 Cam Degrees	
Checking Height	0.012 Inch	
Valve Overlap	47.3 Crank Degrees	
	Intake	**Exhaust**
Centreline	111.2° ATDC	111.2° BTDC
Open	22.7° BTDC	68.8° BBDC
Closed	65.9° ABDC	24.7° ATDC
Duration	268.6 Crank Degrees	273.4 Crank Degrees
Area	22.55 Inch Degrees	22.75 Inch Degrees
Lash	0.0000 Inch	0.0000 Inch
Rocker Ratio	1.15	1.15
Peak Cam Lift	0.28414 Inch	0.28749 Inch

Peak Valve Lift	0.32677 Inch	0.33062 Inch
Lift @ TDC	0.0458 Inch	0.0478 Inch

Timing is free.

The fitting of a Vernier adjustable gear wheel is allowed. Modification of the crankcase to allow cam timing adjustment in-situ is allowed.

It is permissible to plug the oil-way in the front of the camshaft, to prevent oil pushing out the nose of the cam.

Camshaft tolerances are as follows: Lobe centre angle tolerance must be within ±1° and lift + 0.125mm.

5.7.1.3 **Crankshaft**

The standard 602cc crankshaft may be rebuilt for the purposes of bearing replacement and repair to journals. Any alteration not directly attributable to the re-use, disassembly, reassembly and subsequent rebalancing of a crankshaft is forbidden. It is not permitted to re-profile or alter the surface finish of the crankshaft or connecting rods in a manner which would improve windage or stress relief.

5.7.1.4 **Flywheel**

Two standard types of flywheel are permissible. The heavy (early) type flywheel shall only be used in conjunction with a coil spring clutch. The lighter (later) type flywheel shall only be used in conjunction with a diaphragm type clutch. It is permissible to lighten either standard flywheel by machining.

5.7.1.5 **Clutch**

It is permissible to use any type of clutch drive plate.

5.7.1.6 **Barrel Dimensions**

It is permissible to machine the barrels to obtain the dimension detailed on illustration D.

It is permissible to machine the crankcase halves to obtain the dimension detailed on illustration D.

Method for repeatable measurement of barrel dimension:

Step 1: Ensure plates and barrel surfaces are clean

Step 2: Fit plates and tubes with nuts finger tight

Step 3: Starting with the top front nut, followed by the top rear nut and finally the bottom nut, tighten to 5 lb ft.

Step 4: Follow the above sequence, tightening to ten (10) lb.ft.

Step 5: The rectangular bar of measurement 395.00 should be inserted then a feeler gauge of 0.5mm must pass between the end of the bar and the plate.

It is permissible to fit spacers between the barrel and crankcase to increase either the cylinder head volume or the barrel to barrel dimension.

If both dimensions are to be changed, more than one spacer must be fitted.

Any spacer fitted under the barrel, to alter the cylinder head volume, must be removed from the barrel prior to the barrel dimension being measured.

The scrutineer will fit a spacer of equal thickness to the spacer removed from beneath the barrel to the cylinder head prior to the head volume being measured.

If spacers are fitted, their use must be declared before the engine is stripped at the request of the eligibility scrutineer, to check compliance with the regulations.

5.7.1.7 **Cylinder Heads**

Both removal and/or addition of material in the induction and exhaust ports is permitted.

Any machining of the cylinder head or the barrel must be at 90 degrees to the bore and any machining must be continuous over the whole of the plane of the mating surface of the barrel. It is not permissible to machine a step into either mating surface.

It is permissible to machine the cylinder head mating surface (with the barrel) to reduce the volume of the cylinder head. The minimum cylinder head volume shall be 57.0 cubic centimetres with inlet and exhaust valves and spark plug fitted. When checking the volume the cylinder head shall be fitted with a spark plug of recognised make and type for the Citroen 2CV, using one standard plug washer.

It is permissible to fit spacers between the barrel and cylinder head to increase the cylinder head volume. The spacers shall have a minimum internal diameter of 74.0mm ± 0.25mm

5.7.1.8 **Cylinder Head Studs**

It is permissible to substitute standard Citroen block to cylinder head studs with suitable alternatives to a specification agreed with and supplied by ECAS 2cv Parts Limited and being upper stud 239.50mm +/- 0.25mm lower stud 210.50mm +/- 0.25mm threaded M8x1.25 bottom end threaded M9x1.25 top end. rod diameter 7.6mm +/- 0.25mm

5.7.1.9 **Valve Gear**

It is permissible to remove material from the valve seats. The valve face angles shall remain standard (120 deg inlet, 90 deg exhaust).

It is permissible to remove material from the valve guides.

It is permissible to alter the profile of the valve head, but the valve seat angles must remain std (120 deg inlet, 90 degree exhaust.

The profile at the valve end of the rocker is free. The ratio between the rocker shaft and the pushrod cup must remain standard.

5.7.1.10 **Pistons**

Any club approved piston used must have the original compression ratio marks clearly visible on the crown. Note for clarity, the Argentinian pistons do not have a compression ratio mark.

5.7.1.11 **Lubrication System**

It is permissible to fit flexible crankcase to cylinder head oil feed pipes.

It is permissible to repair/modify the oil feed/return legs on a standard oil cooler. The oil cooler must remain in its standard intended position.

5.7.1.12 **Engine Inspection Seal**

It is compulsory that the crank case halves have a bolt with a hole drilled across its diameter fitted, capable of having a scrutineers wire seal fitted, see illustration F.

5.7.2 **Prohibited Modifications**

With the exception of the items detailed in 5.7.1 it is expressly forbidden to machine, mill, grind, polish, weld, modify or otherwise adapt parts to achieve the stated parameters, or for any other reason, including surface finishing.

It is expressly forbidden to fit parts from 425 or 435cc "A" series engines irrespective of whether or not they fit without modification.

5.7.3 **Location**

The engine shall be located in the manufacturer's original position by the manufacturer's intended method. Tilting of the engine is permitted using a spacer or spacers beneath one front engine mount.

5.7.4 **Cooling Systems**

5.7.4.1 The engine cooling system (with the exception of the exhaust heat exchangers) shall remain as standard.

5.7.4.2 If fitted, it is permissible to cut off the brake duct spigots and Dyane induction spigot and also plate the holes.

5.7.4.3 A standard 2CV fan guard shall be bolted to the engine cowling in the manufacturer's intended position. It is permissible to fit spacers up to 12mm long between the fan guard mounting foot and the vertical face of the engine cowling.

5.7.4.4 Any fan assembly shall be fitted using the manufacturer's intended method.

5.7.4.5 It is permissible to remove material from the fan blades.

5.7.4.6 The fan shall rotate at crankshaft speed at all times.

5.7.4.7 Standard fan backings may be strengthened by plating and welding.

5.7.5 **Induction Systems**

5.7.5.1 Only one carburettor shall be fitted. This must be one of the following Solex or Weber downdraft carburettors.

a) Solex Single Choke Model - venturi size - 28mm

b) Solex Twin Choke Models - venturi sizes - 21/24mm or 18/26mm

c) Weber Twin Choke 32/34 DMTL

5.7.5.2 **The following regulations apply to both types of Solex carburettor.**

5.7.5.2.1 Solex carburettors shall be mounted in the manufacturer's intended position on an unmodified production manifold, except it is permissible to enlarge the manifold mounting holes to facilitate fitment.

5.7.5.2.2 It is not permissible to cut and re-weld the manifold.

5.7.5.2.3 It is permissible to re-jet the carburettor, provided that in so doing the alloy body of the carburettor is not modified or altered internally or externally.

5.7.5.2.4 The choke flap and its associated shaft may be removed. The choke cable may be omitted.

5.7.5.2.5 It is permissible to remove one of the floats.

5.7.5.2.6 The vehicle shall be fitted with an effective air filter. Any type, style, size or shape of air filter is permissible provided the airways are less than 1mm in diameter.

5.7.5.2.7 It is permissible to tilt the carburettor, by machining at an angle, the spacer that is fitted between the carburettor and the intake manifold. It is also permissible to fit two spacers.

5.7.5.2.8 It is not permissible to modify any other component to facilitate fitment and it must not protrude beyond the bodywork of the car.

5.7.5.2.9 Mechanical assistance to induction is permitted, using the standard take off points (brake duct spigots and Dyane induction spigot). It is permissible to reduce the length of the spigots. Moving the spigot positions or fabricating new spigots is not permitted.

5.7.5.2.10 It is permissible to remove the existing breather tube from the second choke and blank off the hole (from the inside) allowing the float chamber to vent via the existing choke spindle hole, or top of carburettor.

5.7.5.2.11 It is permissible to redirect the fuel feed from one float chamber to the other as on early twin choke carburettors.

5.7.5.3 **The following regulations apply to the Weber carburettor.**

5.7.5.3.1 This carburettor shall be fitted in the manufacturers intended position.

5.7.5.3.2 The manifold may be modified to enable fitment. The manifold centre boss and any adaptor mountings may be machined to match the carb and manifold openings. These adaptors may be fixed by either welding or bolting.

5.7.5.3.3 It is permissible to slot the mounting holes in the base of the carburettor in order to facilitate fitment to the standard stud pattern of the manifold.

5.7.5.3.4 It is permissible to tilt the carburettor, by machining at an angle, the spacer that is fitted between the carburettor and the intake manifold.

5.7.5.3.5 It is permissible to re-jet the carburettor, provided that in so doing the alloy body of the carburettor is not modified or altered internally or externally.

5.7.5.3.6 Any air filter may be used. An adaptor may be fabricated to enable fitment of the filter.

5.7.5.3.7 No forced air feed induction systems shall be used either from the engine cowling or any other source.

5.7.5.3.8 Only emulsion tubes F22, F25, F30 and F39 standard and unmodified or any combination thereof are permitted.

5.7.5.3.9 It is not permitted to make any modifications or additions to the carburettor other than those specified in regulation 5.7.5.3.

5.7.6 **Exhaust Systems**

5.7.6.1 Any type of exhaust system may be fitted provided that the original manifold is retained.

5.7.6.2 The only permissible modification to the manifold assembly is that the exhaust balancer / anti-icing hotspot pipes / tubes may be removed and plugged.

5.7.6.3 The exhaust gases shall be expelled behind the mid-point of the wheelbase of the vehicle.

5.7.6.4 The exhaust system shall comply with MSA Regulation **J5.16**.

5.7.7 **Ignition Systems**

5.7.7.1 The manufacturer's ignition system must be retained. It is permissible to reset the ignition points within their normal range of adjustment. Electronic ignition is not permitted other than the Classic 2CV Racing Lumenition system specified below.

5.7.7.2 It is permissible to fit a Classic 2CV Racing Lumenition electronic ignition as supplied by the Classic 2CV Racing Club.

5.7.7.3 The Eligibility Scrutineer retains the right to exchange the control unit for another held by him during any event.

5.7.7.4 It is permissible to modify or remove the ignition advance weights to enable the ignition cam to be locked in position.

5.7.7.5 It is permissible to fit a Classic 2CV Racing supplied ‘Lumenition’ chopper which fits directly on to the cam without the need for points advance weights.

5.7.7.6 Any HT lead is permitted.

5.7.7.7 Any 14mm commercially available spark plug is permitted.

5.7.7.8 Either the standard coil or an alternative approved by the Classic 2CV Racing Club and obtained through their authorised supplier may be used. The coil can be mounted in any position.

5.7.7.9 It is permissible to use an engine rev limiter.

5.7.7.10 It is permitted to remove the back metal of the points box.

5.7.8 **Fuel Delivery Systems**

5.7.8.1 The manufacturer's fuel delivery system shall be retained unmodified.

5.7.8.2 It is permissible to install an in-line fuel filter.

5.7.8.3 It is permissible to replace the standard fuel line with an alternative type or material of the same internal diameter.

5.7.8.4 It is permissible to modify the filler cap to comply with **CR5.15.4**. of these Regulations.

5.7.8.5 The use of alternative fuel pumps or pressure regulation equipment is prohibited.

5.7.9 **Engine - Eco Class.**

As **5.7.1** to **5.7.8** above except for the following:

a) Cylinder Heads – Only removal of material is permitted.
b) 8.5:1 Pistons must be used
c) A standard Citroen camshaft must be used, in compliance with standard Citroen tolerances. No machining of any part is permitted. Vernier gear wheels are not permitted.
d) A standard Citroen Flywheel must be used, no machining is permitted.
e) Exhaust must be unmodified. The baffles may be removed from the crossbox, any subsequent welding must only be part of this process.
f) Carburettor must be a Solex type.

5.8 Suspensions:

5.8.1 **Permitted Modifications**

5.8.1.1 The fitting of a Citroen Ami 8 / Super front anti-roll bar (maximum diameter 15mm) is permitted. Ami 8, Ami Super or modified 2CV swinging arm end plates are permitted. The anti-roll bar, if fitted must be mounted vertically in the standard position by the standard method.

5.8.1.2 It is permissible to alter the vehicle ride height beyond the manufacturer's recommended setting but only by adjustment of the suspension tie rods, modifying or substituting the internal components of the suspension cans or by inserting a 10mm steel spacer below the front axle mounting points.

5.8.1.3 At least 5mm of threaded tie rod must remain within the knife edge eye and this must be secured with a locknut.

5.8.1.4 Any type or size of shock absorber may be fitted provided that the standard mounting points are used and the mounting points are not modified or altered in any way.

5.8.1.5 For Frome Racing Chassis Only – it is permissible to add additional shock absorber mountings to the Chassis, in order to raise the shock absorber. The centre of the mounting hole must be no less than 89mm from the top of the chassis. The original mounting point must be retained unmodified.

5.8.1.6 A shock absorber must be fitted to each axle arm.

5.8.1.7 The front rubber bump stops may be removed. The original bump stops may be reduced in height, but alternative bump stops may not be fitted.

5.8.1.8 The rear rubber bump stops may be removed, modified or replaced. Standard, modified or alternative bump stops shall be mounted in the manufacturer's intended position. It is permissible to weld attachments to the rear suspension arms to modify the contact height of the bump stops.

5.8.1.9 It is permissible to modify or restore the king pin inclination by cutting off and re-welding the ends on the suspension arms. Particular attention should be paid to the standard of welding.

5.8.1.10 It is permissible to fit an upper spherical bearing to the top of the hub, to provide additional support to the existing kingpin. A bracket may be fitted to the top hub attachments and welded to the steering lever arm; this may form a strengthening web along its length and a further bracket to the suspension arm at the other. Particular attention shall be paid to alignment and the standard of welding.

5.8.1.11 The camber on the front wheels is Free

5.8.1.12 Standard spring tubes must be fitted (see illustration E). It is permissible to cut open the spring tubes and substitute or modify the internal components. Spring tubes with modified or alternative internal components shall have the standard ends welded back on in the manufacturer’s intended position.

5.8.1.13 It is permissible to replace the rubber doughnuts and solidly mount the spring cans.

5.8.1.14 It is permissible to modify or alter the camber on the rear wheels.

5.8.1.15 The camber on the rear wheels is Free.

5.8.1.16 It is permissible to strengthen the rear suspension arms.

5.8.1.17 It is permissible to install stops to prevent the rear suspension arms dropping when the rear of the car is jacked off the ground to change wheels.

5.8.1.18 It is not permitted to fit shock absorber remote reservoirs inside the car.

5.8.2 **Prohibited Modifications**

5.8.2.1 It is not permissible to alter the length, diameter or mounting position of the spring tubes.

5.8.2.2 The tie rods must remain standard Citroen A series or Ami Super items.

5.8.2.3 The tie rod mountings must remain as standard.

5.8.3 **Wheelbase/Track**

The suspension system shall be standard production Citroen 2CV6 utilising telescopic shock absorbers.

5.8.4 **Suspensions - Eco Class.**

The only shock absorbers permitted, other than standard, are supplied either through Avo UK Ltd or Gaz Shocks Ltd.

5.9 Transmissions:

The transmission (i.e. clutch, gearbox, drive shafts) must be housed (in the case of clutch and gear train) within a standard Citroen alloy gearbox and bell housing mounted behind the engine in the manufacturer's intended position. There shall be four forward and one reverse gear, all of which shall be in a fully operable condition. Only the use of 2CV6 gearboxes is permitted as detailed in 3 below.

5.9.1 **Permitted Modifications**

5.9.1.1 It is permissible to extend the gear change lever to allow 4th and reverse gears to be engaged whilst strapped in the driving position.

5.9.1.2 The gear change must remain in the manufacturers intended position.

5.9.1.3 The two slots in the rear gearbox mounting may be closed (e.g. with welded washers).

5.9.1.4 The gear train from a drum braked gearbox may be transferred to a disc braked gearbox, provided that the gear train complies with 5.9.3 below.

5.9.1.5 It is permissible to strengthen the gear change linkage and substitute an alternative assembly for the standard rubber bushes, this must be mounted in the manufacturers original and unmodified position.

5.9.2 **Prohibited Modifications**

It is not permissible to intermix ratios.

5.9.3 **Transmission and Drive Ratios**

1st	5.202 (19/25 X 14/31 X 14/25 = 0.0465)
2nd	2.656 (19/25 X 23/26 X 14/25 = 0.3764)
3rd	1.785 (14/25 = 0.5600)
4th	1.315 (19/25 = 0.7600)
Rev	as first gear
Final Drive	4.125 (8/33)

5.10 Electrics:

The standard 2CV electrical system shall be retained. It is permissible to modify or replace the wiring loom. The fitting of additional instrumentation and switches is also permitted.

5.10.1 **Exterior lighting**

5.10.1.1 It is permissible to modify the vertical members of the lighting bar to aid quick removal. A horizontal support bar of 15mm max dia and 1mm wall thickness may be fitted to aid fitting and removal.

5.10.1.2 Rear lights and brake lights shall be operable.

5.10.1.3 A high level rear brake light must be fitted in the rear window.

5.10.1.4 It is permissible to use replica plastic headlamp and indicator lenses that have been approved by the Eligibility Scrutineer.

5.10.1.5 Rear indicators must be fitted and working.

5.10.1.6 A 5 watt tell-tale shall be fitted and working on the instrument panel. It is permissible to fit additional rear indicators to the boot lid.

5.10.1.7 It is permitted to remove the rear light cluster spacer.

5.10.2 **Rear Fog Light**

A rear fog light shall be fitted.

5.10.3 **Batteries**

The 12 volt battery may be of any size or shape provided it is fitted in the standard position on the bulkhead. The battery and voltage regulator must be firmly secured.

5.10.4 **Generators**

5.10.4.1 A functioning alternator or dynamo must be fitted. It is permissible to fit a switch in the field circuit wiring.

5.10.4.2 The alternator pulley guard shall have a 25mm diameter hole cut in it to facilitate easy checking of the belt tension.

5.10.4.3 The alternator belt should have sufficient tension to make the alternator function.

5.10.4.4 It is permitted to modify the tensioner arm to allow non-standard alternators to be used.

5.10.5 **Windscreen Wipers**

5.10.5.1 It is permissible to remove one windscreen wiper arm and blade.

5.10.5.2 It is permissible to modify the windscreen wiper mechanism, retaining the standard motor, to allow single blade operation.

5.10.5.3 An operable windscreen washing system shall be fitted. The washer jet may be moved from the manufacturers intended position.

5.11 Brakes:

5.11.1 Brake pad / lining material is free from restriction. If fitted, front brake discs must be at least 4mm thick.

5.11.2 It is permissible to replace the brake pipes with flexible pipes.

5.11.3 The braking system shall be a standard Citroen 2CV6 drum/drum or disc/drum system which must operate on all four wheels.

5.11.4 The handbrake must operate on both front wheels simultaneously using the original levers on the callipers by the use of cables onto any type of locking ratchet fitted inside the car. It must be possible for the driver to operate it while strapped and seated in the normal driving position.

5.11.5 It is permissible to fit heat sinks to the brake calipers.

5.12 Wheels / Steering:

5.12.1 A universal steering joint shall be fitted at the base of the steering column. Double universal jointed steering columns are permitted.

5.12.2 It is permissible to use any track rod adjuster that uses the existing threaded ends of the track rods and the track rod end housing.

5.12.3 It is permitted to reinforce the track rods by sleeving.

5.12.4 It is permissible to fit an additional clamp on the track rod adjuster sleeves and weld the pivot arms to the hub assemblies.

5.12.5 It is permitted to fit a non-standard steering wheel. Quick release steering wheels are allowed.

5.12.6 Wheel spacers are not permitted.

5.12.7 The wheels shall be standard production 4J x 15 steel items from the Citroen A series range, or from the Citroen Ami Super.

5.12.8 It is permitted to replace each standard track rod with a straight bar, threaded one end to fit the standard track rod adjuster or approved 2CVRC solid adjuster and fitted with a female rose joint on the other. A piece of steel angle is fastened to the normal track rod mounting cones protruding from the rack to lock them together. The track rods are attached to the angle by a bolt securing the rose joint to the horizontal face of the steel angle.

5.13 Tyres:

5.13.1 **Specifications**

The only permitted size is, 135 X 15.

Remoulds are prohibited.

All tyres shall have a tread depth of at least 1.00mm across 75% of the tread when the car is presented at pre-race scrutineering and in the forming up area before racing.

5.13.2 **Nominated Manufacturer**

All tyres used in practice and competition shall be Toyo 310. All Tyres shall be of a production compound.

5.14 Weight:

5.14.1 Cars shall have a minimum weight of **655kg**, inclusive of driver at all times during and at completion of qualifying and racing.

5.15 Fuel Tank / Fuel:

5.15.1 **Types**

5.15.1.1 The fuel tank shall be a Citroen 2CV6 standard production item (metal or plastic) with a maximum capacity of 25 litres.

5.15.1.2 It is permissible to fit a vent to the fuel filler neck to enable compliance with MSA Regulation **K14.1.2.**

5.15.1.3 Alternative sender units or modifications to the tank are not permitted.

5.15.1.4 It is permissible to fit the club supplied enduro filling neck and cap. The cap shall be fitted to the body by a flexible tether.

5.15.2 **Locations**

The fuel tank shall be located in the manufacturer's intended position between the chassis arms at the rear of the vehicle.

5.15.3 **Fuel**

Standard pump fuel shall be used as defined as petrol in the **Section B**, Nomenclature and Definitions of the MSA Yearbook.

5.15.4 **Filler Cap**

A filler cap shall be fitted that complies with Section **K14.1.2**. of the MSA Yearbook.

5.16 Silencing:

5.16.1 All cars must comply with MSA Regulation **J5.17**. It is the competitor's responsibility to ensure that the exhaust system meets the required silencing standards for the competitions for which it is entered.

5.17 Numbers and Championship Decals:

5.17.1 **Positions**

5.17.1.1 To be eligible to score points in this Championship all vehicles must carry a BARC Shield on each side in an unobscured position when viewed from a direct side elevation (assuming decals are available at the meeting signing-on). Failure to have these in place at scrutineering will render the car ineligible.

5.17.1.2 Race numbers backgrounds shall be located in the intended orientation on the front doors and bonnet as required by **Section J** of the MSA Yearbook.

5.17.1.3 Competitors shall be required to locate, unmodified and in the intended orientation the decals of the Classic 2CV Racing any Championship sponsor and associates on the cars, in positions to be notified.

5.17.2 **Suppliers**
Decals for above and below the race number background for the front doors shall be obtained by competitors through the Classic 2CV Racing Club.

5.17.3 **Driver Identification**
All competitors should display their name in both rear passenger windows of the car using white vinyl lettering. Preferred typeface is Arial, first letter uppercase, at least 5cm high, following letters to be lowercase.

5.18 Miscellaneous

5.18.1 In addition to Q19.1.3, it is strongly recommended that all cars must, wherever possible, be equipped with two front and two rear towing eyes positioned equally either side of the longitudinal centre-line. They must be clearly visible, marked with an arrow and the word "tow" and the wire painted in yellow, red or orange to contrast with the vehicle colour scheme.
The towing eyes must be made of at least 6mm diameter steel wire rope with a 6x19 wire core, each which must have a breaking-strain of at least 2 tons. Each towing eye must allow the passage of a cylinder with a diameter of 60 mm, situated 25mm forward of the adjacent bodywork - 100 mm above and below this hole must retain clearance to enable the recovery crews to attach straps and shackles.
The towing eye must be fixed to a structural part of the chassis with a minimum of M12 fixings, the inner part must be flexible in order for the towing eye to be retracted inside the bodywork profile. A "pull-cord" must be attached to the towing eye to enable the marshals to access the wire loop. The end attached to the chassis may be either 'thimble' or 'open-loop' style.

6 SPECIFIC REGULATIONS – 24Hour EVENT:

6.1 General Regulations

THE FOLLOWING REGULATIONS ARE APPLICABLE TO ALL CARS AND COMPETITORS

6.1.1 **APPLICABILITY AND REFERENCE TO OTHER REGULATIONS**
These Regulations apply to the 2CV 24 Hour Endurance Race. They are supplemental to:

a) 2CV Parts.com Championship regulations (UK Eco and Club Classes Only)
b) Règlement Sportif La 2CV Cup (Euro 2CV only)
c) Circuit 2CV Règlement Technique (Euro 2CV Only)

6.1.2 **DEFINITIONS:**
The term 'Organisers' means the BARC: The British Automobile Racing Club

6.1.3 **ENTRIES:**
The Organisers reserve the right to invite applications for entry from competitors and refuse entries without explanation. In the event that the entries are oversubscribed priority will be given to fully completed entries in the order that they paid their deposit.

6.1.4 **DECALS:**
The Organisers reserve the right to place three decals from the race sponsors on each car within the event. The location of these will be with the agreement of the competitor concerned but in the event of a lack of agreement the Organiser's decision will be final.

6.1.5 **QUALIFYING:**
There will be two qualifying sessions on Friday evening which will both be timed with the timings used to establish the grid positions. All drivers must complete at least three laps during the "night" session in order to qualify for a position on the grid. Starting positions will be determined by the fastest single lap recorded in qualifying by the car concerned.

6.1.6 **BRIEFINGS:**
A briefing for all drivers who are either new to the circuit or new to night racing will take place on Friday at a time and place which will be advised to all Competitors at sign-on. In addition there will be a mandatory Entrants and Drivers briefing, at 9.30 on Saturday, the location of which will be again advised at sign-on. Team mangers must then brief their crew members on issues raised within their briefing as they are responsible for all actions of team members. There will also be a mandatory training session regarding fire / fuelling safety, details of which will be advised at sign-on, at least one member per team must attend.

6.1.7 **DRIVER NOMINATIONS:**
The Secretary of the Meeting must be informed of the order in which drivers will go out to qualify during the night practice session by 19:00 on Friday. In addition he must be informed of the driver due to start the race at least 2 hours before the start of the race.

6.1.8 **DRIVING TIME:**
During the race no driver may drive for longer than three hours continuously and must rest for at least one hour between driving stints. No driver may drive for longer than fourteen hours in total. "Driving" will be deemed to include any time spent in the pits when a driver brings a car in and then re-joins the race.

6.1.9 **TIMING:**
All cars must be fitted with the competitors own transponder, appropriate to the timing system being used and fitted in a manner approved by Timing Solutions Limited. The Transponder specification is TranX260. Transponders are no longer available to hire.

Timing feeds will be available on the pit wall and within the garages with printed timings

being available every two hours during the event.

6.1.10 **COMPETITION NUMBERS:**

Competitors are responsible for ensuring that their cars carry their allocated race number on each front door and on the nearside of the bonnet, between the front grille and top bonnet hinge, facing the time-keepers box on the nearside (situated on the drivers left) and these numbers must be of the standard laid down by the MSA. The car number should also be prominently displayed in the nearside rear quarter-light in numbers at least 150mm high. If numbers become obscured or difficult to read the car concerned may be shown the black flag to enter the pit lane and rectify the problem.

The fitting of reflective door number panels, supplied through the 2CV Club and reflective numbers in the front window is compulsory and all numbers must be in place at scrutineering.

6.1.11 **NOISE TESTING:**

a) All cars must undertake and pass noise testing prior to going onto the circuit. Cars must therefore be taken to the assembly area between 18:30 and 19:30 on Friday so that noise tests may be carried out in the designated test area. Having passed the test cars will then be released into the pit lane prior to the start of the qualifying session. Failures must be rectified before being given access to the circuit.

b) Noise will be monitored during the event and any car deemed to be too noisy on circuit will be shown the black flag and brought to the pits to rectify the situation to the scrutineers satisfaction which may mean they are required to undertake a further noise test.

6.1.12 **SIGNALS AND LIGHTS:**

During the hours of darkness the yellow and red flag signals will be replaced with light signals. During the hours of darkness cars must have their lights illuminated at all times unless the car is stationary in the pits. The Clerk of the Course will determine the commencement and end of the hours of darkness and a “lights on” board will be displayed at the line indicating that lights must be switched on. Lights must remain on until the “lights off” board is displayed at dawn.

6.1.13 **SAFETY CAR:**

The safety car will be brought into operation to neutralise the race on the instructions of the Clerk of the Course. When the order is given all marshals posts will display yellow signals, which will be maintained until the safety car intervention is over. The safety car with its revolving orange lights operating will join the circuit regardless of the position of the leader, but will endeavour to pick up the leader. Cars between the safety car and the leader may be waved past, one at a time, when safe to do so until the leader is at the head of the train. In the event that the race leader pits during the safety car period it may be necessary for the car on circuit directly behind the leader to take over at the head of the train prior to a restart. All competing cars must catch and line up behind the safety car no more than 5 car lengths apart, as soon as safely practical to do so and then maintain station at the same speed as the safety car. Overtaking of the safety car or any other competing car is forbidden unless signalled to do so by the safety car observer, this signal will be via a green light during the hours of darkness. While the safety car is in operation competing cars may stop in their pits but may only re-join the race after the last car in the train behind the safety car passes the pit exit. When the safety car is withdrawn competitors may not overtake each other until they have passed the green signal at the start-line.

6.1.14 **STOPPING THE RACE:**

In the event of a serious incident or severe adverse weather conditions it may be necessary to stop the race. This will be effected by the showing of red flags or lights. Competitors must slow down, must not overtake, complete the lap they are on and stop on the grid. Parc Fermé conditions will apply and competitors are reminded that no team personnel are allowed onto the grid. Any car in the pit lane at the showing of the red signal must remain where it is and all work on cars must cease unless specifically authorised by the Clerk of the

Course. When the race is restarted the duration of the restarted race will be specified by the Clerk of the Course and the two (or more) parts of the race will be combined to produce an aggregate result. It is not permitted to change drivers during the course of the stoppage unless specifically authorised by the Clerk of the Course. The period of time that the race is stopped will count towards the driving times of the drivers in question. Under these conditions the Clerk of the Course may revise certain driving time criteria for individual drivers.

6.1.15 **TOW BACK:**

Cars that stop on circuit may only be worked on by the driver alone using only the tools carried in the car. However cars may be towed back to the pits by the Organisers, if requested by the driver to do so, where they may be worked on as required. Tow backs may be prioritised by the Organisers, at their sole discretion, after if necessary consulting the Clerk of the Course as they occur for the overall good of the event or they may decide to refuse a tow back if the car is too badly damaged or too difficult to move. Cars towed back will be subject to a three lap penalty which will be subtracted from the total completed up to that time. All cars will be towed back to the pit lane. These tow back rules will only apply up until the final hour of the race when the Organisers will only tow cars to the nearest place of safety.

6.1.16 **PIT PROCEDURE:**

a) A pit allocation will be provided by the Organisers but as there is limited space within the pit lane teams must show every consideration to those around them at all times.

b) A space at the back of the garages, as determined by the Organisers, may be used for storage in order to give more space within the garages themselves. However the fire lane must remain unobstructed at all times during the event.

c) All work including refuelling must be undertaken on the garage side of the yellow hatched area in the pit lane.

d) It is not permitted to drive a car in the pit lane by using reverse gear at any time under any circumstances.

e) Push starting is only permitted if it is clearly under the control and supervision of the pit lane marshals.

f) Only three people from each car (excluding the drivers) may cross the pit lane to undertake signalling. No structures or umbrellas may be used on the pit wall but rain screens are permitted provided that they do not project above or beyond the pit handrail.

g) Team managers are responsible for notifying the pit office of all driver changes during the event with the slip provided, as soon as the stop is completed.

h) There is a pit lane speed limit of 60kph at all times during the event. Speeds may be monitored during the event by the use of a radar gun. It is the driver's sole responsibility to ensure that his/her car does not exceed 60kph.

i) It is recommended that all personnel wear a high visibility jacket or vest.

j) Mobile telephones are a safety hazard and hence must not be used in the pit lane or pit wall at any time during the event.

k) All "hot" work i.e. welding, grinding must be done inside the garage with a suitable fire extinguisher to hand.

l) A maximum of 4 people may work on the car at any one point in time during a pit stop. Working on the car is defined as any person touching the car.

6.1.17 **REFUELLING:**

a) Re-fuelling must be carried out using an MSA compliant system. For all UK championship cars it is mandatory that an unmodified (save as to the length of the breather tube below) 2CV Racing Club supplied "Tuff Jug" model number TJ1 or its successor, clearly marked by the manufacturer (Fair Trails Enterprises or it's successors), modified filler neck and cap is the only system used. The breather tube inside the Tuff Jug shall be at least 60cm in length.

The filler cap shall be securely in place at any time the car is on the circuit, failure to ensure this could result in the car being black flagged.

There is strictly no decanting of fuel from one container to another at any time. Random inspections to ensure compliance will take place. Only one tuff jug may be used during a refuelling stop.
Tuff Jugs shall have the car number that they are used with clearly identified on both sides of the jug in numerals not less than 100mm high.

All Euro cars must comply with their regulations.

b) Fuel must only be drawn from the filling station nominated by the Organisers in advance of the event and advised by official bulletin. All fuel must be drawn using procedures laid out and provided during the mandatory training session details of which will be promulgated at the event. Each team must supply a two wheel sack truck (or similar) with adequate strapping to secure the Tuff Jug to transport fuel from the filling station to the pits.

c) During refuelling the engine must be turned off and the driver must vacate the car. No work may be carried out on the car rearwards of the engine bay firewall except that two people with both feet on the ground may work inside the car.

d) Refuelling may not be used in such a way as to increase the fuel flow rate over that engendered by gravity and non-assisted airflow. The Organisers reserve the right to instruct the team to modify their refuelling procedures and failure to comply with such instruction may lead to exclusion from the event.

e) The team member who actually refuels the car during a pit stop must wear fireproof overalls, gloves and balaclava. In addition a fire extinguisher must be adjacent to another team member also dressed in fireproof overalls, gloves and balaclava during the refuelling process in case it is needed to be used.

f) A maximum of four people may work on the car at any time.

g) All competitors should note that smoking is not permitted in the garages, pit lane or on the pit wall at any time during the event. This rule also applies to electronic cigarettes. All team members and guests must be made aware of this restriction and failure to comply will lead to immediate exclusion for the car concerned.

h) Each team must provide a suitable fire extinguisher.

6.1.18 **RADIOS:**

It is forbidden for any team to set up any kind of radio, electronic or electrical system by which they can communicate with the driver whilst he/she is in the car or between team members at any stage during the event. Officials will be actively looking for anyone thought to be in breach of this regulation and anyone found doing so will be reported to the Clerk of the Course.

6.1.19 **EVENT PENALTIES:**

The Clerk of the Course may impose “drive through” or “stop/go” penalties for breaches of the sporting regulations of the event and specific relevant sections of the MSA Yearbook. These penalties do not carry penalty points against the drivers licence.

Driver changes, refuelling and any other work is not permitted during such a penalty.

6.1.20 **CLASSIFICATION:**

To be a classified finisher the competing car must either cross the finish line within five minutes of the chequered flag being displayed for the end of the race and have completed 50% of the distance covered by the winner, or if not running at the time of showing of the chequered flag the car must have completed 80% of the distance covered by the winner in order to be classified.

6.1.21 **PARC FERME:**

Parc Fermé is located at the entry end of the pit lane next to the assembly area. Cars will remain there for a minimum of 30 minutes or until released by the Clerk of the Course.

6.1.22 **ADDITIONAL INSTRUCTIONS:**
Any additional instruction relating to the event will be published by official race meeting bulletin which will be posted on the official notice board and circulated to all registered competitors.

6.2 ELIGIBLE CARS:

All cars must comply with the 2CVParts.com Championship regulations (or counterpart EURO Regulations) and any additional regulations applicable to the event, copies of which can be found on the BARC website. Any bulletins issued prior to the event will be available at signing-on.

6.2.1 **ELIGIBLE DRIVERS:**
All drivers must comply with the 2CVParts.com Championship regulations in order to be eligible to gain championship points. Competitors who fail to produce valid documentation at signing-on may be prevented from taking part in qualifying or racing.

Each car must have a minimum of three and maximum of five drivers for the event. No driver may drive more than one car per class and no more than two cars overall in the race, however a driver may qualify more than one car during official qualifying but prior to the start of the race must nominate which car they intend to drive in the race. A drivers qualifying time will only count for the car that he/she nominates to race and any change of driver line-up must be approved by the Clerk of the Course at least 30 minutes before the start of any session.

Championship points will be awarded for the finishing positions in the UK class

6.3 RACE START:

The race will be started by means of a rolling start using the following procedure and audible warning sequence:

	Signal:	Instruction:
i.	1 minute	Start engines and clear the grid.
ii.	30 Seconds	Be prepared for start of Green Flag Lap
iii.	Green Flag	Complete one lap of the circuit forming into grid order prior to the final corner of the circuit
iv.	Red Lights ON	Maintain grid position
v.	Red Lights OFF	Race start signal

Cars still in the pits when the pit lane closes or taken to the pits prior to the start may join the race from the pit lane after the last car has crossed the start line after the start of race signal is given.

6.4 TECHNICAL:

6.4.1 **ADDITIONAL SCRUTINEERING**
Tuff Jugs containing approximately 5 litres must be taken along with the car for scrutineering (UK classes only)

The Organisers reserve the right to select any car for additional eligibility scrutineering on the morning of the race in accordance with championship regulations. Any failure to comply with the technical regulations during this scrutineering process may result in the car not being allowed to start the race or being allowed to start under certain conditions that the Clerk of the Course may in his sole discretion see fit to determine, such as by imposition of a weight penalty. A minimum of two hours before the start of the race will be allowed to reassemble any components that may previously have been stripped during this process.

6.4.2 **VEHICLE LIGHTS**

6.4.2.1 ADDITIONAL DRIVING LAMPS

A maximum of two additional driving lamps are allowed per car and they may only be fixed to the existing lamp bar or the bodywork below the light bar.

6.4.2.2 MANDATORY WORKING LIGHTS

During the hours of darkness all cars must have the following light in working order. Two forward facing white headlamps, two side door competition number lights (white facing downward on top of each number), two rear-facing tail lights and three working brake lights, all of which must be deemed satisfactory by the eligibility scrutineer. Any car failing to comply with the above may be ordered into the pits and not allowed to continue until it does comply.

6.4.2.3 PROHIBITED LIGHTING ARRANGEMENTS

No car may show any red light to the front. No car may show any white light to the rear.

It is prohibited to use any form of flashing light, with the exception of indicators.

It is not permitted for any car to run with identification lights which are either red or yellow in colour, which could be confused with a flag or light signals.

6.4.3 **CLEAR VIEW**

It is prohibited to completely obscure the view through the car from front to rear by the addition of strips of tape or similar. In the event of dispute as to compliance with the regulation the decision of the Chief Scrutineer shall be final.

6.4.4 **SECURE PANELS**

Cars should have all body panels securely in place throughout the event. In the event of damage occurring to any panel the scrutineer may decide to ask that the car is black flagged and brought into the pits to rectify the situation to their satisfaction.

6.4.5 **VEHICLE WEIGHT**

All cars must comply with MSA and championship regulations at all times during the event (MSA Regulation **J 5.15.1**). Any addition weight needed must be in place for scrutineering and it's method of securing will be checked for compliance of MSA Regulations by the safety scrutineer. It is permitted to add and remove weight for varying drivers during a pit stop.

Tool boxes, jacks and spare wheels are permitted only when safely secured and specifically approved by the safety scrutineer.

Cars may be weighed at any time during the event at the discretion of the Clerk of the Course.

6.5 PODIUM PRESENTATION:

The podium presentation, as well as the race, will be broadcast live on the club website. All drivers to be presented with trophies are requested to wear their race suits and pit crew in clean team attire.

7 APPENDICES

The following Commercial Regulations are “contractual” between the Entrant and/or Driver and the Organisers and / or Promoters and are not considered by MSA. Accordingly, the application of these Commercial Regulations by the Organisers and/or Promoters will not be subject to the Judicial processes of either the Championship Stewards and/or the MSA / MSC.

7.1 Race Organising Clubs & Contacts.

BARC:	British Automobile Racing Club, Thruxton Circuit, Andover Hampshire.
SP11 8PN Tel:	01264 882200
Fax:	01264 882233
E-mail:	competitions@barc.net

Championship Co-ordinator	David Wheadon British Automobile Racing Club, Thruxton Circuit, Andover Hampshire. SP11 8PN
Tel:	01264 882209
Fax:	01264 882233
E-mail:	dwheadon@barc.net

Drivers Rep:	Katy Storey T.B.A.

Classic 2CV Racing: T B A

7.2 Drawings:

Illustration A - Deleted

Illustration B

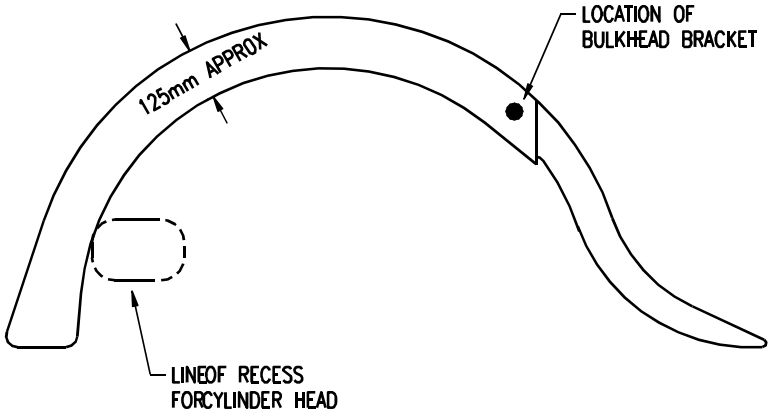

Illustration C - Deleted

Illustration D

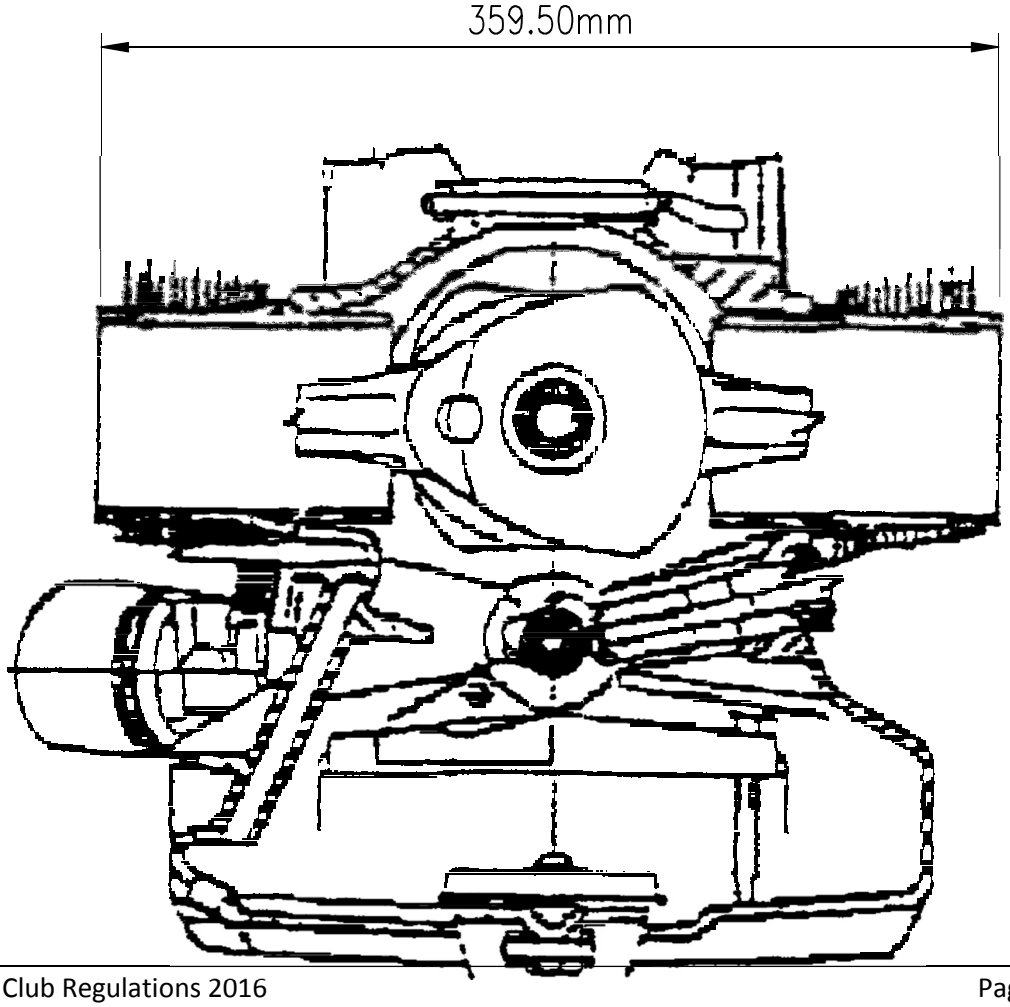

Illustration E

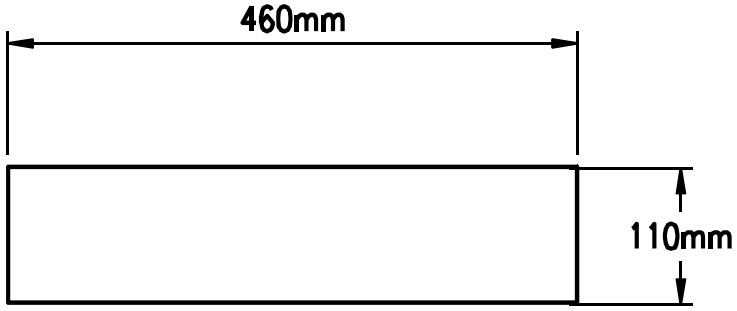

Illustration F

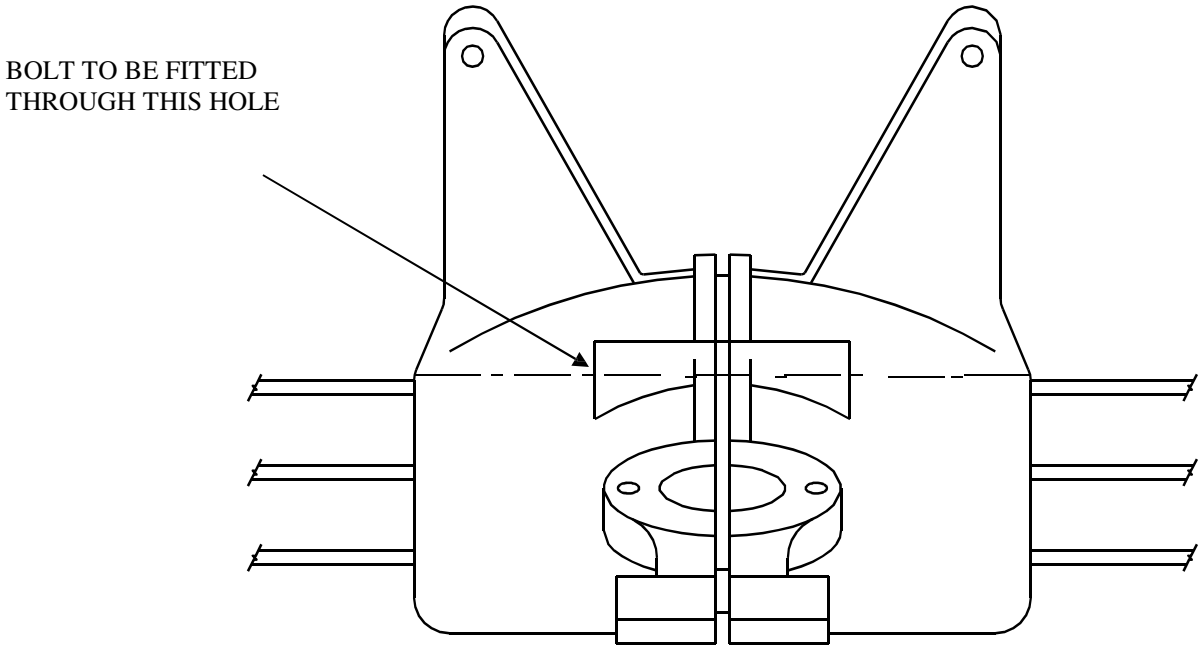

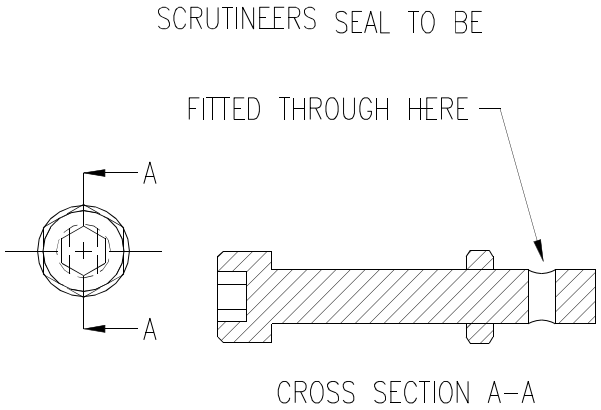

7.3 COMMERCIAL UNDERTAKINGS:

7.3.1 In addition to article 1.3.3 above membership of the Classic 2CV Racing Club even if that membership is only “guest membership” is one of the conditions applied to being considered for being put forward as a guest driver.

7.3.2 The Technical Committee of the Classic 2CV Racing Club will from time to time, visually inspect competitor’s cars and it is a mandatory requirement that competitors facilitate such inspections. This Technical Committee may also advise the Eligibility Scrutineer on such matters which may potentially contravene these regulations. As a result if the Eligibility Scrutineer feels that the regulations have been breached then he may request ballast to be carried until compliance is achieved.

7.3.3 The Classic 2CV Racing Club reserve the right to measure the profile of any camshaft and compare it to a reference camshaft/profile retained by the 2CV Technical Secretary. The details of the findings of any such check will be distributed to the Technical Secretary, Competitor and Scrutineer as well as the information being retained by the Classic 2CV Racing Club.

7.3.4 **Championship Graphics**

The Classic 2CV Racing Club have the authority to designate areas of bodywork on all cars registered for or competing in rounds of this Championship as the ‘property of the Classic 2CV Racing Club’. These areas which are designated are to be available to the Club for the display of graphics supplied by the Club appertaining to sponsorship of the Club for the Championship or specific races. These areas are:

a) An area on the front of the bonnet above the grille
b) The area below the A panels (car body)
c) A part of the front doors including above and below the number backgrounds
d) Front windscreen
e) No advertising is permitted on rear screen / side windows as per MSA G101.
f) Front spoiler.
g) Area of body shell above both side doors, size to be advised.

An illustration showing all areas for championship graphics will be supplied with the 2014 Classic 2CV Racing Club membership package and failure to display designated graphics will contravene these regulations.

2CV PARTS.COM CHAMPIONSHIP 2016

Please complete in capital letters

DRIVER DETAILS		
Name of driver:		
Address: Postcode:		
e-mail Address:		
Nationality:		
Telephone (Daytime):		(Evening):
Age:		Date of birth:
Competition licence number:		Grade:
BARC membership number:		Expiry date:
2CV club membership number:		

ENTRANT DETAILS		
Name of entrant:		
Address: (if different from above) Postcode:		
Telephone (Daytime):		(Evening):
Competition number:		NOTE: No's 1 - 20 will be allocated by the Classic 2CV Racing Club based on 2015 Championship positions. New members will be allocated a number between 21 – 99.
ALL CORRESPONDENCE SHOULD BE SENT TO:	DRIVER ☐	ENTRANT ☐

SIGNATURE OF ENTRANT: _
(if different from Driver)

SIGNATURE OF DRIVER: _

PLEASE COMPLETE REVERSE OF FORM

Previous racing experience of driver:

TO BE COMPLETED BY ALL APPLICANTS:

I wish to register for the **2CV PARTS.COM CHAMPIONSHIP 2016** and I declare that the information given above is correct. I understand that should the above information change in any way I will confirm details in writing to the BARC as detailed below.

SIGNED: DATE:

ONCE FULLY COMPLETED THIS FORM SHOULD BE RETURNED TO:

The Classic 2CV Racing Club

PRIOR TO THE FIRST RACE ENTERED

FOR OFFICIAL USE ONLY

Registration fee - free

Date received: .....

Date registration card sent: .....

Competition number allocated: .....